Motorized Pulley Usage in USA and UK Coal Mining Industry - Next Step Will Be Underground Deep Mines…

Steve Pringle[1], Mike Gawinski[2]

1 UK Coal Mining Ltd, Harworth Park, Blyth Road, Harworth, Doncaster, England
2 Rulmeca Corporation, 6508 Windmill Way, Wilmington, NC, USA

springle@ukcoal.com
mgawinski@rulmecacorp.com

Abstract

This presentation expands on previous papers by Messrs Pringle and Gawinski. It includes an update on the utilization of large Motorized Pulleys at coal handling facilities in the United States, England, and Scotland and describes specific environmental, safety, operational, and financial benefits derived by UK Coal since 2003. It highlights key technical and regulatory product advancements and predicts incorporation of Motorized Pulley technology in a significant way in underground coal mines in the USA and UK in the near future.

1 INTRODUCTION

Developed in the early 1950s in Europe, Rulmeca Motorized Pulley (RMP) technology was slow to gain acceptance internationally until the latter part of the twentieth century. The product's compactness and high reliability have been well proven on large materials handling machines at various bulk handling facilities during the last three decades.[1] The concept's acceptance in coal handling facilities in the United Kingdom and the United States has dramatically increased during the last nine years.

2 UNDERSTANDING MOTORIZED PULLEYS

The Motorized Pulley, which is an internally-powered conveyor belt drive, has improved system reliability and personnel safety while lowering energy and maintenance expenses at a variety of coal mining facilities in Europe and the United States. The product's secret is its hermetic seal, protecting both the Motorized Pulley's AC motor and its gearbox within the oil-filled steel pulley shell. See figure 1.

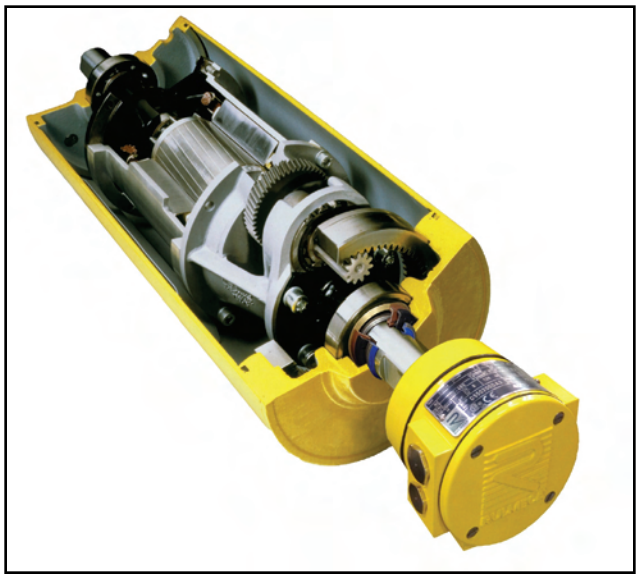

Figure 1 Rulmeca's AC motor and gearbox are hermetically sealed within the oil-filled Motorized Pulley shell. The circulating oil lubricates all mechanical components while transferring heat from the motor through the pulley shell and into the conveyor belt. The conveyor belt is used as an infinite "heat sink."

Bulk materials such as coal are often difficult to handle on belt conveyors driven by exposed drive systems because it is difficult to protect electromechanical components (e.g. motors, gearboxes, sheaves, chains, sprockets, and couplings) from abrasive and corrosive materials and harsh operating conditions.

As illustrated in figure 2, cast iron enclosures are usually built to protect drive components from the environment and expanded metal grating and access doors are

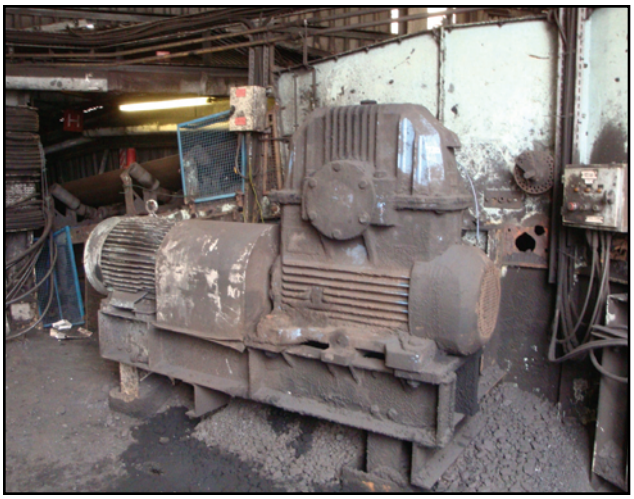

Figure 2 Exposed drive system for coal handling conveyor consists of pulley, pillow blocks, motor, couplings, and gearbox, all protected by cast iron and/or steel enclosures. Note steel enclosures built to protect personnel from large rotating coupling.

installed to protect personnel from the moving components. Note that the bigger the protective enclosure, the more space it occupies.

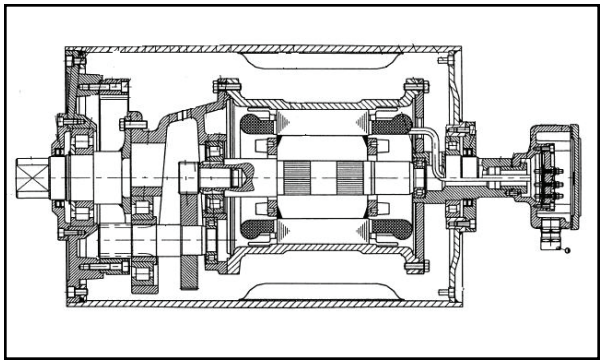

Figure 3 Diagram illustrates how motor frame and gearbox serve as a light "deep beam" inside Motorized Pulley, eliminating the need for a heavy solid large diameter "through shaft."

Motorized Pulleys eliminate redundant protective enclosures and hide motors and gearboxes out of harm's way within an oil-filled pulley shell. Rather than adding a cast iron motor enclosure and a cast iron gearbox enclosure, the Motorized Pulley uses the pulley shell as an enclosure. Therefore, they have proven to be an optimal conveyor drive solution in numerous operating conditions.

This drive design yields these primary advantages:

- Gears and bearings are continuously and automatically splash lubricated, lowering maintenance requirements.
- Electromechanical components are sealed within pulley shell, increasing reliability, minimizing drive size, improving personnel safety, reducing personnel guarding requirements, providing even drive weight distribution to the conveyor structure, and decreasing noise.
- Redundant enclosures, such as a cast iron motor frame and steel coupling guards are eliminated, decreasing drive weight.
- Motor frame and gearbox are used as structural members, eliminating the need for a large diameter "through shaft", decreasing drive weight, limiting shaft deflection, and yielding long bearing life. See figure 3.

3 MOTORIZED PULLEY USAGE AT US COAL HANDLING FACILITIES

In North America, power plants and shipping terminals were the first coal handling facilities to use Motorized Pulleys. Figure 4 shows a 100 HP (75 kW) model 800H Motorized Pulley which was installed on a primary belt at a municipal utility in 2006 after they tested a smaller 20 HP (15 kW) unit on TDF (tire derived fuel) handling for five years.

Figure 5 shows a 75 HP (55 kW) model 630H which was installed when Alaska Railroad Corporation's Seward Coal Export Terminal upgraded their 800 tph shiploader to handle 2,000 tph in 2005.[1]

Figure 4 US municipal utility installed 100 HP (15 kW) Motorized Pulley in 2006 to handle coal after testing a 20 HP (15 kW) unit for five years.

Figure 5 Seward Coal Terminal shiploader uses 75 HP (55 kW) Motorized Pulley to drive 800 fpm (4 m/s) shuttle belt to transfer Alaskan coal into ships at 2,000 tph.

US coal mines began using the drives in a dramatic way in 2010 when major coal producers began using Rulmeca Motorized Pulleys to drive coal handling conveyors in surface operations as well as in underground mines. See figure 6.

Figure 6 Model 800H at 100 HP (75 kW) was installed in 2010 in new surge pile conveyor at major underground coal mine in western Virginia.

After using some Rulmeca Motorized Pulleys, configured in a nested dual drive arrangement, underground in West Virginia, one major US coal producer stated that the Rulmeca drive system was the company's "best productivity improvement of 2011."

Figure 7 Two 75 HP (55 kW) Rulmeca Motorized Pulleys in "nested dual" arrangement move ROM coal on underground conveyor belt. Note absence of external motor, gearbox, and pillow blocks.

Cline Resources recently increased their inventory of Rulmeca Motorized Pulleys to drive panel belts in their underground mines. Just as UK Coal did in West Yorkshire, England in 2003, Cline Resources thoroughly tested a drive system (figure 7) at their mines in West Virginia and Illinois, insisting that Rulmeca provide a spare Motorized Pulley (to reduce the risk of a stoppage) during the trial period.

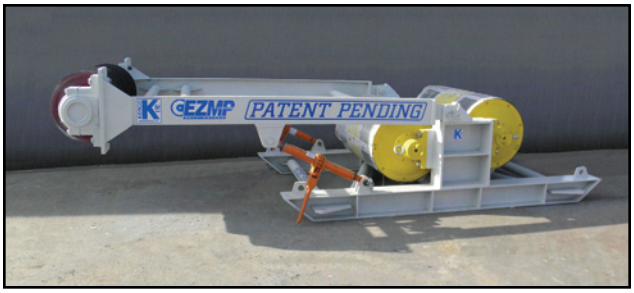

Figure 8 Built for underground coal mines, Kerco's EZMP includes twin Rulmeca Motorized Pulleys and may be mounted to mine floor or ceiling.

The trial at Cline's Maryan Mine consisted of moving 1,200 tph of ROM coal at 600 fpm (3 m/s) on a 48" (1200 mm) wide conveyor belt with two 75 HP (55 kW) model 630H Rulmeca Motorized Pulleys, nested into a special "EZMP" frame manufactured by Kerco, Inc. of Madisonville, KY. See figure 8.

The trial was conducted on conveyors that extend from 800' (240 m) to 1,200' (360 m) long to accommodate the movement of continuous miners. The dual drive system incorporates two model 630H 75 HP (55 kW) Rulmeca Motorized Pulleys and has a narrow footprint since each Motorized Pulley has a 24.80" (630 mm) diameter and 55.12" (1400 mm) face width. See figure 9. The drive's compactness and light weight are advantageous when moving conveyors in restricted spaces, such as coal mines, hundreds of feet below the earth's surface.

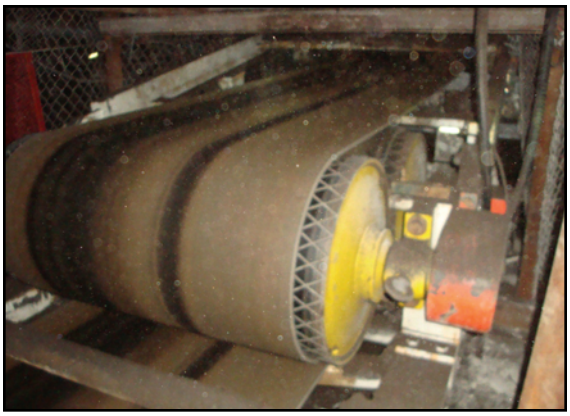

Figure 9 Model 630H Motorized Pulley has small footprint of 24.8" (630 mm) diameter and 55.12" (1,400 mm) face width and only weighs 2,200 lbs (1000 kg). Compactness & light weight are advantageous when moving conveyor underground.

Each 75 HP (55 kW) drive only weighs 2,200 lbs (1,000 kg), much less than an equivalent exposed drive system. Ideally, underground coal mine booster (pony) drives and discharge drives should be as small and light as possible due to space restrictions underground. The dual drive described above is built for underground coal mines and incorporates Rulmeca Motorized Pulleys in a "nested dual" configuration. Each drive may be mounted to the mine floor or hung from the ceiling. Currently configured to provide 150 HP (110 kW) with two 24.80" (630 mm) diameter 75 HP (55 kW) Motorized Pulleys, the system is available up to 660 HP (500 kW) with two 40.16" (1020 mm) diameter 330 HP (250 kW) Motorized Pulleys. Note that the 150 HP (110 kW) dual drive package only weighs 8,600 lbs (3,900 kg), including two Motorized Pulleys and structure. This is less than half the weight of some "equivalent" dual drive systems with exposed motors, gearboxes, and pillow blocks.

4 MOTORIZED PULLEY USAGE AT UK COAL HANDLING FACILITIES

Figure 10 Kellingley Colliery upgraded main coarse discard conveyor in 2003 with Rulmeca Motorized Pulley and eliminated 30 days and 300,000 tons of lost production annually.

UK Coal Ltd. expanded their use of Motorized Pulleys after eliminating an annual problem of 30 days and 300,000 tons of lost production at the Kellingley Colliery in 2003.[2] The initial trial (figure 10) took one year. A 100 HP (75 kW) Motorized Pulley was installed at the discharge end of the coarse discard conveyor, replacing a problematic bottom belt conveyor drive (figure 11) located near the conveyor tail. UK Coal shared the news regarding their "new" Motorized

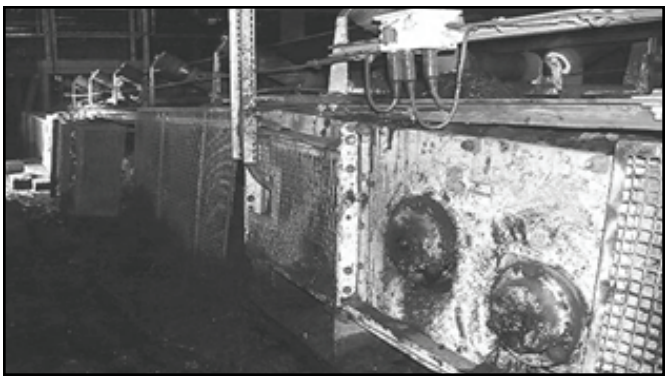

Figure 11 Kellingley replaced old problematic "bottom belt drive" near tail on the main coarse discard conveyor with 100 HP (75 kW) Rulmeca Motorized Pulley at discharge end.

Pulley conveyor drives with customers, such as the E-on Ratcliffe Power Station. They soon began converting their 30 year old exposed conveyor drives to RMP units. The power station now has more than 20 Motorized Pulleys from 2 HP (1.5 kW) to 100 HP (75 kW) installed on most of their coal handling belts, including the bunker feed system, train unloading system, and sampling system.

The Kellingley Colliery informed other UK Coal prep plants about their good Motorized Pulley experience. Other collieries began installing the drives within a few years. By 2006, Ellington, Maltby, and Welbeck added the drives to their systems. As of 2010, Thoresby had joined the trend (figure 12), bringing the installed base of RMP to 85 within UK Coal.

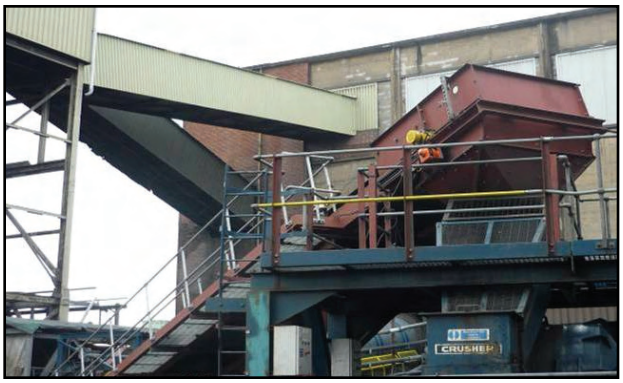

Figure 12 Thoresby Colliery replaced the old Barrel Product Conveyor drive with 30 HP (22 kW) Rulmeca Motorized Pulley in 2010.

By 2011 UK Coal's installed base of Motorized Pulleys totaled 85 units. When power plants and terminals are included to the total, 120 Rulmeca Motorized Pulleys were installed in the UK. The primary motivation for the change in conveyor drive technology was the demonstrated annual savings in reduced maintenance expense and electrical power consumption, initially at Kellingley, then subsequently at four other UK Coal prep plants.

Steve Pringle said "Our Plant Managers and Engineers were skeptical about the Motorized Pulley concept in 2003, mainly due to previous experience with drives of a similar design which had been unsuccessful in the 1960's and 70's in the UK. However, the Rulmeca technology has now been thoroughly practically proven within UK Coal Ltd and our confidence with the equipment and the service that we receive from the company continues to pay dividends to our business."

Mr. Pringle continued, "The benefits from the safety aspect of improved access around drive heads and the vastly reduced requirements of guarding are invaluable in what is still a tough and challenging industry. As of March 2011, we have installed 85 Rulmeca Motorized Pulleys in our Coal Prep Plants. Our Engineering policy is to continue to change out old exposed drives as our budget permits. The development of Motorized Pulleys to be used in underground applications of potentially explosive atmospheres could eventually replace many large and major conveyor drives systems that we use."[3]

Since Motorized Pulley technology was pioneered in the 1950s, why was the concept's acceptance in UK and US coal handling systems delayed until this century? The development of higher powered RMP, IP67 oil sealing systems, and use of synthetic oil were key factors. Table 1 illustrates the growth in Motorized Pulley usage during the last ten years.

Rulmeca Motorized Pulley USAGE	
United Kingdom (Coal Prep Plants)	
2003	Zero
2011	103; 2 HP (1.5 kW) - 120 HP (90 kW)
United Kingdom (Power Plants & Terminals)	
2007	Zero
2011	35; 2 HP (1.5 kW) - 330 HP (250 kW)
United States (Coal Mines, Power Plants & Terminals)	
2005	Zero
2011	20; 15 HP (11 kW) to 100 HP (75 kW)

Table 1 Growth in Motorized Pulley Usage in coal handling installations in United Kingdom & United States

5 HEALTH & SAFETY CONSIDERATIONS

Motorized Pulleys enable conveyor system operators to provide a safer work environment for **employees,** in addition to the operational advantages described above. Eliminating exposed drive system components increases safe personnel access space at all drive assemblies and reduces personnel guarding requirements, as shown in figure 13. Dissipating motor and gearbox heat into the conveyor belt eliminates the danger of radiating heat from exposed

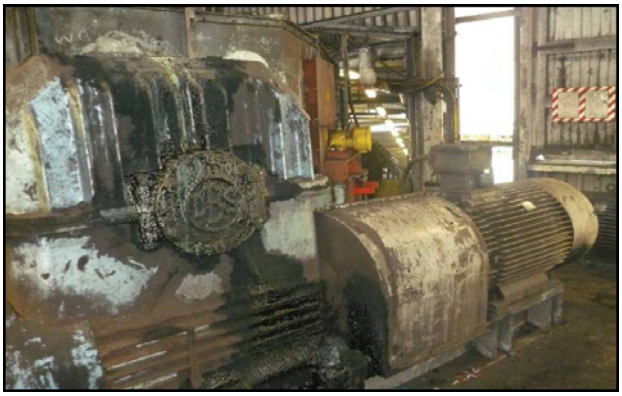

Figure 13 Note huge 100 HP (75 kW) external drive system for Kellingley #758 reclaim conveyor (foreground) and absence of external components on comparable 100 HP RMP (background) on #720 belt.

Figure 14 Kellingley Colliery measured a sound level of 75 dB on conveyor #720 after 100 HP (75 kW) RMP was installed, 15 dB less than the 90 dB measured when old exposed drive was in service.

motors and gearboxes. Minimizing external moving parts reduces the risk of entrapment. Extending oil change frequency to more than five years reduces the risk of skin problems and slipping on spilled oil. Figure 14 shows sound meter test, which revealed a 15 decibel reduction in noise after a 100 HP (75 kW) Motorized Pulley replaced an exposed drive system.

6 CAPITAL/MAINTENANCE COST SAVINGS & ENERGY CONSERVATION

Although Rulmeca Motorized Pulleys were initially installed to improve system reliability and eliminate conveyor downtime, they yielded additional benefits to the Kellingley Colliery. Tables 2 & 3 show a reduction in capital outlay for conveyor drives as well as a measured reduction in electrical power consumption. Note also that Motorized Pulleys require significantly less time to install than exposed drive systems because internal drives are "pre-aligned", lighter, and have fewer external components.

Rulmeca Motorized Pulley	
Complete Drive System	$55,760
Exposed Drive System	
Motor	$9,840
Pulley & Bearings	$5,740
20" (500 mm) Gearbox	$37,720
Couplings	$6,560
Baseplate	$820
Total Cost	$60,680

Table 2 Capital Cost of Motorized Pulley and Exposed Drive System

Annual Savings* for One Rulmeca Motorized Pulley at 100 HP (75 kW)
7.8% efficiency improvement for one 100 HP (75 kW) unit =>
$0.115/kw-hr x 5.86 kw-hrs x 8,760 hrs/yr = $5,904/yr
Annual Savings* for 14 Rulmeca Motorized Pulley at 2 HP (1.5 kW) to 120 HP (90 kW)
$0.115/kw-hr x 3.0 kw-hrs/RMP x 14 RMP x 8,760 hrs/yr = $42,558/yr
* Basis for annual energy consumption is all conveyors running 24 hrs/day and 365 days/yr

Table 3 Electrical Power Savings for 14 Motorized Pulleys at Kellingley Colliery

UK Coal eliminated numerous maintenance tasks by eliminating their old exposed drive system components and replacing them with new Motorized Pulleys. Table 4, a 100 HP (75 kW) drive example, illustrates the cost savings.

Annual Exposed Drive Maintenance Schedule - 100 HP (75 kW) Example
1. Make Examinations (every 6 months)
Check alignment
Check spider plate condition
Change Multidisc
Check motor bearings
Check Guarding
Subtotal = 6 hrs x 2 men x $33.00/hr x 2 = $792.00/year
2. Change Multidisc (every 6 months)
Subtotal = $459.00 x 2 = $918.00
3. Do Vibration Analysis & Report (monthly)
Subtotal = 2 hours/mo x 12 x $33.00/hr = $792.00
4. Analyze Oil Samples & Make Report
Subtotal = 2 hours/mo x 12 x $33.00/hr = $792.00
Total Annual Maintenance Cost Eliminated = $3,294.00

Table 4 Comparison of Maintenance Costs Savings Derived Through Use of Motorized Pulley vs. Exposed Drive System

7 MOTORIZED PULLEY RANGE AND R&D PROGRAM

Initially developed to drive relatively small and short conveyor belts, the portfolio of Motorized Pulleys has grown in response to end user requests to include the 30" (800 mm) diameter model 800H in the 1980s, with powers up to 180 HP (135 kW), and the 40" (1020 mm) diameter model 1000HD in 2010, with powers up to 330 HP (250 kW). The range now includes diameters from 5.5" (138 mm) to 40" (1020 mm), powers from 0.33 HP (0.25 kW) to 330 HP (250 kW), and belt speeds up to 1,320 fpm (6.7 m/s). Table 5 summarizes the nine models currently available. Figure 15 illustrates the concept drawing of what is now model 1000HD. The unit incorporated design features compatible with flameproof equipment and underwent years of full load test simulation and, as explained below, has been delivered for service.

Diameter	Max Power	Max Belt Speed
5.45" (138mm)	1 HP (0.75 kW)	300 fpm (1.5 m/s)
6.44" (164mm)	3 HP (2.2 kW)	760 fpm (4 m/s)
8.50" (216mm)	7.5 HP (5.5 kW)	600 fpm (3 m/s)
12.64" (320mm)	15 HP (11 kW)	600 fpm (3 m/s)
15.75" (400mm)	20 HP (15 kW)	760 fpm (4 m/s)
19.72" (500mm)	40 HP (30 kW)	760 fpm (4 m/s)
24.80" (630mm)	75 HP (55 kW)	960 fpm (5 m/s)
31.50" (800mm)	180 HP (135 kW)	1064 fpm (5.5 m/s)
40.16" (1020mm)	330 HP (250 kW)	1320 fpm (6.7 m/s)

Table 5 Current Range of Motorized Pulleys Available

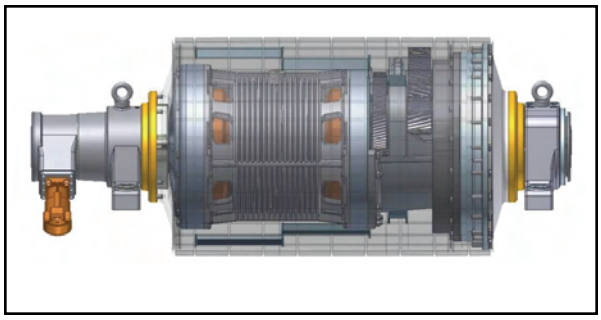

Figure 15 Concept Drawing of Model 1000HD, available with power to 330 HP (250 kW) and capable of working on 380v, 460v, 575v, and 1,000v power supplies

8 FLAMEPROOF STANDARDS FOR MOTORIZED PULLEYS

Since the advantages for conveyor operators are so obvious, especially where space is restricted and operating conditions are harsh, why has the use of Motorized Pulleys been slow to develop within the underground coal mining industry? There are two reasons: legislation and power ratings.

Underground coal mines, in general, use numerous dual drive systems to spread "effective belt tension" (Te) along the conveyor length. Minimizing the amount of tension that a conveyor belt must withstand reduces its weight, which is essential to assembling and relocating conveyors underground efficiently. Mainline conveyor boosters often consist of two 250 HP (190 kW) drives while dual 75 HP (55 kW) panel belt drives are common. In underground coal mines in the US, motors which are near the active face must have a certified "explosion proof" design. In the UK, all motors in service underground must have "flameproof" design and certification to insure conformity to legislation.

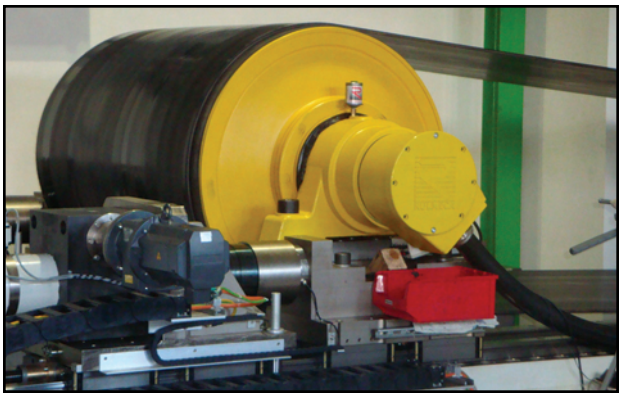

Figure 16 Model 1000HD at 330 HP (250 kW) under full load testing at Rulmeca Germany GmbH Motorized Pulley facility in Aschersleben, Germany.

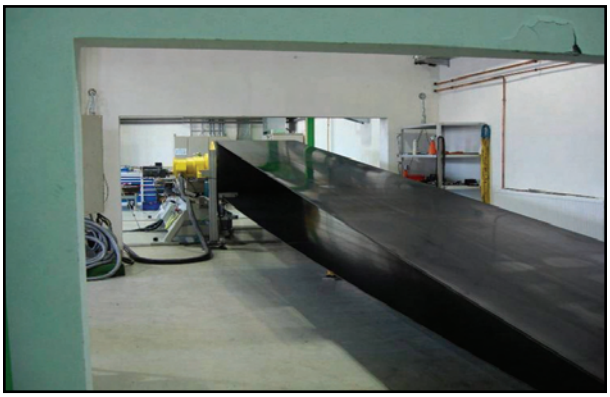

Figure 17 Full load testing apparatus includes drive station with data acquisition (background) acoustic chamber foreground and dynamometer (not shown).

Rulmeca's model 1000HD, with powers of 220 HP (165 kW), 270 HP (200 kW), and 330 HP (250kW), has completed its development and testing. See figures 16 & 17. The design will kill the proverbial "two birds with one stone" because the design meets both needs...higher power and flameproof capabilities. Now dual drives systems of 440 HP (330 kW), 540 HP (400 kW), and 660 HP (500 kW) are possible. The product is now being delivered for surface applications while flameproof certification is in process. Figure 18 shows a coal export dock conveyor which was converted to a 1000HD in 2011.

The flameproof development is based on the European standard IEC 60079 - flame proof enclosure "Ex d". Table 6 highlights pertinent regulations governing electricity in the workplace in the UK.

The first flameproof prototypes of 100 HP (75kW) 480 fpm (2.5 m/s) units will be, as per agreement, produced for UK Coal (see figure 19.)

	Electricity at Work Regulations 1989
1	Reg. 19 - Restriction of equipment in certain zones below ground.
2	Equipment and components intended for use in 'potentially' explosive atmospheres in underground mines EN1710:2005
3	Electrical apparatus for 'potentially' explosive atmospheres, Part 25 ‘Intrinsically Safe Systems' EN 60079-25:2004.
4	Electrical intrinsically safe apparatus for 'potentially' explosive atmospheres. Part 0 'General requirements' EN60079-0:2004 BS50014.
5	Electrical apparatus for 'potentially' explosive atmospheres Part 1 Flameproof enclosures 'd' EN 60079-1:2004.

Table 6 Pertinent UK Regulations Concerning Electricty in the Workplace

Figure 18 Model 1000HD at 330 HP (250 kW) was installed in this dock conveyor in 2011.

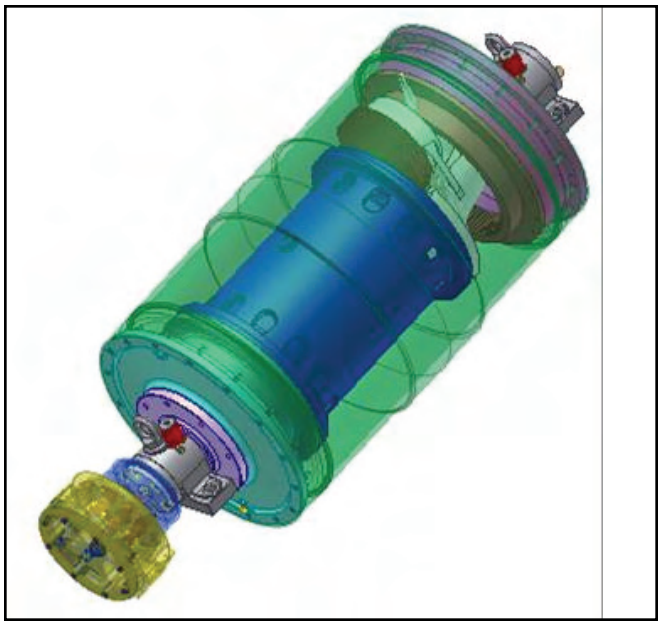

Figure 19 CAD drawing illustrates features which are essential to enable flameproof capability and certification

9 NEW 1000HD APPLICATION AT COAL SHIPPING TERMINAL IN UK

Clydeport upgraded its ship loader and primary dock conveyor with Motorized Pulleys delivered by Rulmeca in 2011 and 2012 at the Hunterston Terminal in Fairlie, Largs, Scotland (figure 20). This followed several years of testing of Rulmeca drives elsewhere at the facility. The terminal can unload 350,000 dwt cape size vessels and load 95,000 dwt vessels as well as trains and trucks. Personnel are keenly aware of the risk of demurrage fees if the terminal's conveyor system were to delay coal loading or unloading. With a promise of more reliable "up time" plus a reduction in energy costs, the Motorized Pulley made its debut in 2008 on a secondary conveyor drive in the terminal's rapid train loading station.

Figure 20 Clydeport replaced conveyor drives on dock conveyor and ship loader at the Hunterston Coal Terminal in 2011.

Figure 21Installation of 1000HD at Hunterston Terminal 2011.

Prior to upgrading the dock, Hunterston's shifts maintenance manager, Willie Caig, said "We've run the Rulmeca pulleys in the train loader on and off 24 hours a day, depending on coal demand, without any problems. We look forward to the same good product performance when we fit the big drives onto our ship loader and export dock conveyor."[4]

With regreasable labyrinth seals, ceramic lagging, internal backstops, and synthetic oil, the new 180 HP (135 kW) ship loader drives and 330 HP (250 kW) dock conveyor drive (figure 21) will offer high product and personnel protection in the harsh salt water environment.

10 CONCLUSION

The successful use of Motorized Pulley technology has been well demonstrated within the coal industry in Europe and North America. Since the number of applications is growing rapidly, awareness of the internally-powered conveyor drive technology is clearly spreading among plant operators and engineers at coal prep plants, fossil-fueled electric generating stations, and in deep coal mines.

AUTHORS' NOTE

Please note that this presentation contains the views of the authors and not necessarily the views of UK Coal Ltd.

REFERENCES

1. Michael J. Gawinski, Wolfgang Gresch, Motorized Pulleys Solve Harsh Environmental Problems at North American Ship Loading Terminals, Proceedings of Bulk Europe 2006 Conference, Barcelona, Spain, October 2006.

2. Steve Pringle, Mick Barry, Mike Gawinski, Motorized Pulley Solves Dirt Conveyor Problem at UK Coal Colliery, 23rd Annual International Coal Preparation & Aggregate Processing Exhibition & Conference, Lexington, KY, May 2006.

3. Steve Pringle, Mick Barry, Mike Gawinski, Motorized Pulley Usage in UK & US Coal Mining & Electricity Generation Expands…Next Step Will Be Deep Mines, 28th Annual International Coal Preparation & Aggregate Processing Exhibition & Conference, Lexington, KY, May 2011.

4. Coal People Magazine. 2011. “Hunterston Terminal - Powerful Rulmeca Motorized Pulleys Installed at Deepwater Port,” August pp. 24-25.