138LS Connection Diagrams

Terminal Box - 1 Phase - US Motor

Code:

T1 & T2: Thermal protection
B1 & B2: Internal brake
Cr: Run Capacitor
Cs: Start Capacitor
K: Start Capacitor Relay
rd - red
ye - yellow
bk - black
bu - blue
gn - green

Low Voltage - Clockwise Rotation

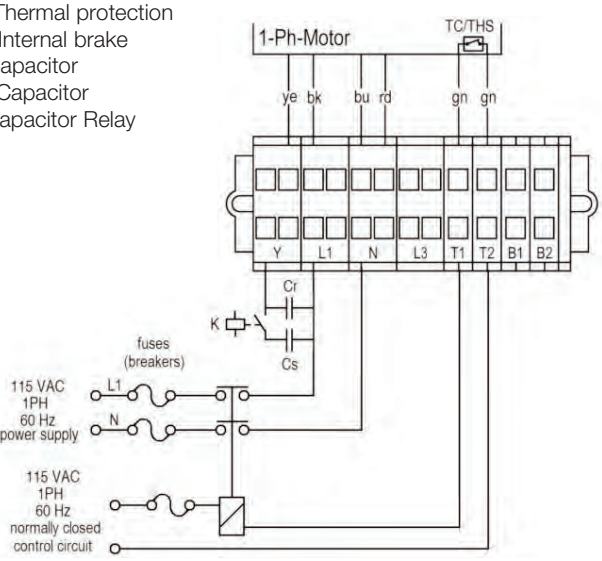

Low Voltage - Counterclockwise Rotation

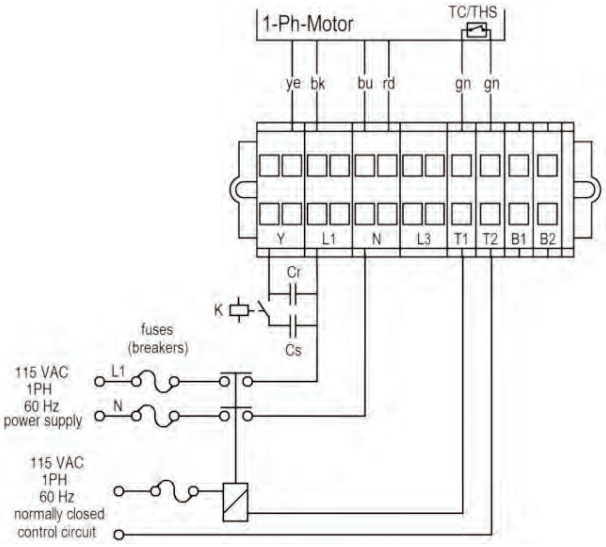

High Voltage - Clockwise Rotation

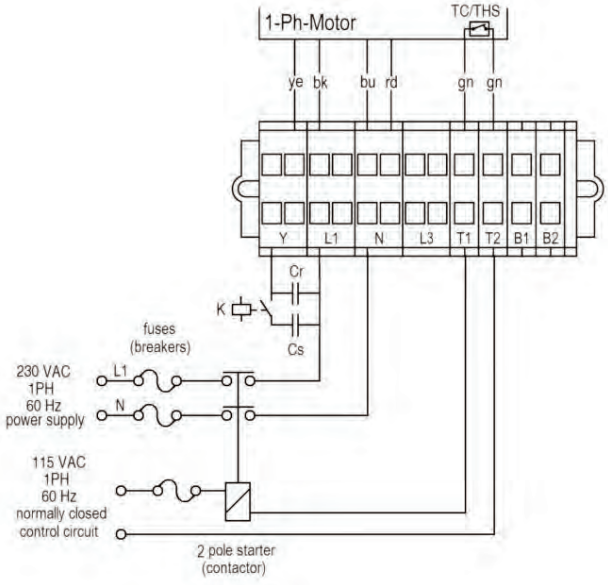

High Voltage - Counterclockwise Rotation

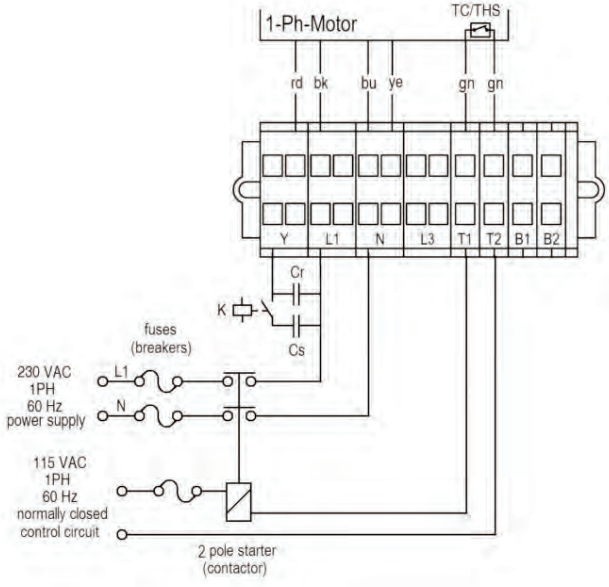

Assembly instructions

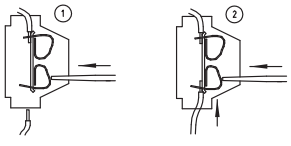

Push down clamp

Push in wire